ECN	REV	DESCRIPTION	DATE	APPROVED

1. 芯 数/NO. of contacts

系 列/Series	303	304
孔位排列/Pin Number		
适配线缆/Conductor size	26AWG	26AWG
导体直径/Pin size	0.5mm	0.5mm
额定电流/Rated current	1A	1A
额定电压/Rated voltage	60V	60V

2. 面板开孔/RECOMMENDED PANEL CUT-OUT

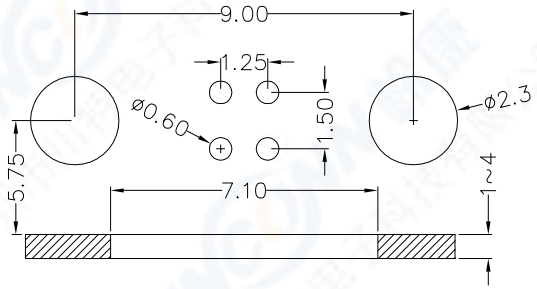

元器件面

3. 编码原则/Part Number

固定式插座/Fixed socket M5H 4 304 A F V B G1 (S)

- 主型号/Type
- 外观/Appearance
- 针数/Pin Number
- 绝缘体型号/Insulator coded: A
- 绝缘体型号/Insulatortype:F=Female
- 针类型/Sold Tpye:V
- 针长度/Pin Length:B=Standard
- 表面处理/Plating:Gold Flash
- 屏蔽/Shielded

4.技术特性/Technical Characteristics

1.寿命/Durability: >500 mate/unmate cycles
2.Pin接触电阻/ Pin Contact Resistance：≤10 mΩ
3.绝缘电阻/Nsulation Resistance：≥ 100 MΩ
4.温度等级/Rated Temperature: -20˚C,+80˚C
5.盐雾/Corrosion Resistance: Salt spray test,>48h
6.防水等级/Waterproof: IP67

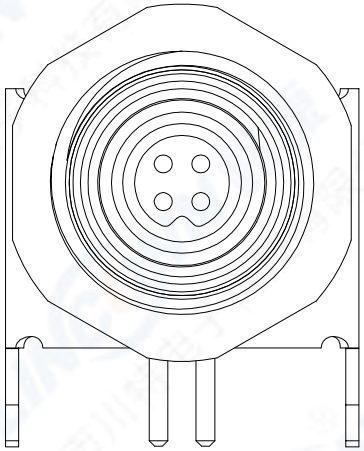

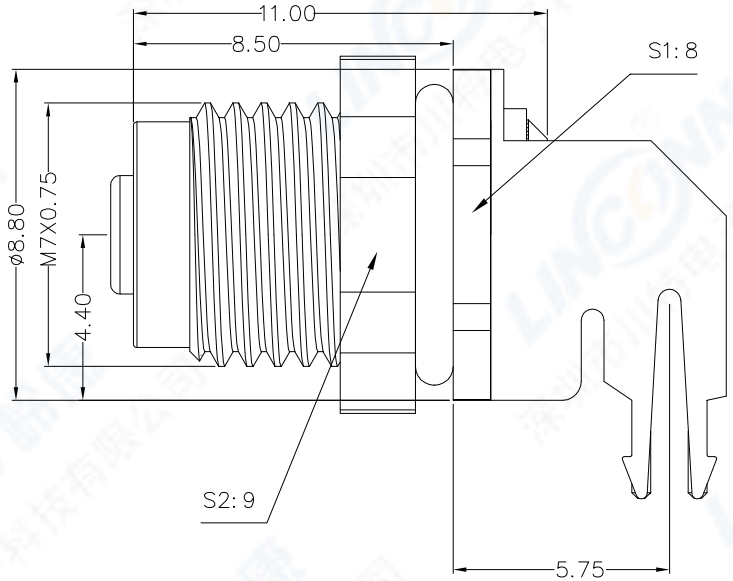

序号ITEM	名称 & 规格/Name & Description
6	屏蔽壳/Shield Shell: 黄铜镀金/Brass,G/F
5	六角螺母/Hexagonal nut: 黄铜镀镍/Brass,Nickel plated
4	母针芯/PIN: 磷銅鍍金/Phosphor copper,G/F
3	外壳/Outer Shell: 黄铜镀镍/Brass,Nickel plated
2	密封圈/O-RING: Rubber
1	绝缘体/Insulator: PA BLACK

	SCALE	TOLERANCES ARE: DECIMALES .X± 0.2 .XX± 0.1 ANGLES ±	TITLE: 固定式插座/Fixed socket
	F		
SHEET	DIMENSION	APPROVALS	DATE
1 OF 1	MM	APPROVED:	
DWG NO.	REV.	CHECKED:	
M5F	A0	CHECKED:	
		DRAWN: pengsen	03/24/2014

PART NO. M5H4304AFVBG1(S) REV. *

LINCONN Linconn Elc Tech Co.,LTD