ECN	REV	DESCRIPTION	DATE	APPROVED

1.芯 数/NO.of contacts

系 列/Series	303	304
孔位排列/Pin Number	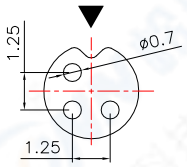	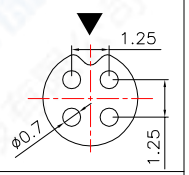
导体直径/Pin size	0.5mm	0.5mm
额定电流/Rated current	1A	1A
额定电压/Rated voltage	60V	60V

"▼"Insulator key

2.绝缘体型号/Insulator Coded

Coded	A
型号	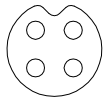

3.面板开孔/RECOMMENDED PANEL CUT-OUT

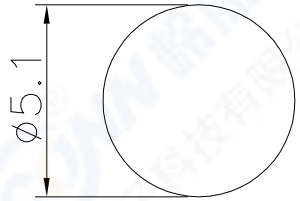

4.编码原则/Part Number

浮动式插头/Free Plug M5E 0 304 A F N B G1

- 主型号/Type
- 外观/Appearance:0=Standard
- 针数/Pin Number
- 绝缘体型号/Insulator coded: A
- 绝缘体型号/Insulatortype:F=Female
- 针类型/Sold Tpye:N=Turning
- 针长度/Pin Length:B=Standard
- 表面处理/Plating:Gold Flash

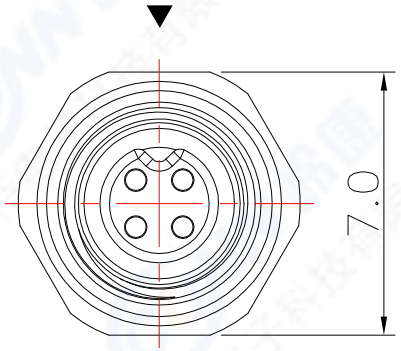

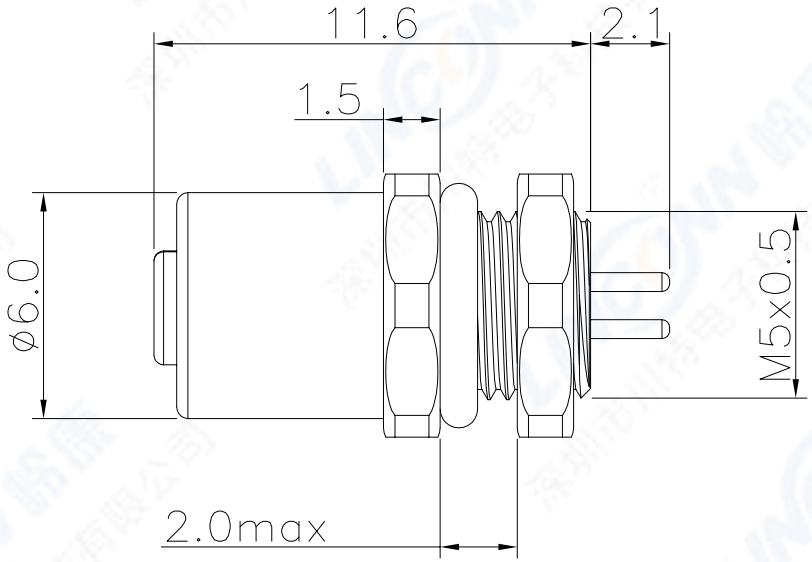

5.技术特性/Technical Characteristics

1.寿命/Durability: >500 mate/unmate cycles
2.Pin接触电阻/ Pin Contact Resistance：≤10 mΩ
3.绝缘电阻/Nsulation Resistance：≥ 100 MΩ
4.温度等级/Rated Temperature: -20°C,+80°C
5.盐雾/Corrosion Resistance: Salt spray test,>48h
6.防水等级/Waterproof: IP67

序号ITEM	名称 & 规格/Name & Description
5	六角螺母/Hexagonal nut: 黄铜镀镍/Brass,Nickel plated
4	母针芯/PIN: 磷銅鍍金/Phosphor copper,G/F
3	外壳/Outer Shell: 黄铜镀镍/Brass,Nickel plated
2	密封圈/O-RING: Rubber
1	绝缘体/Insulator: PA BLACK

SCALE	F	
SHEET	DIMENSION	
1 OF 1	MM	
DWG NO.	REV.	
M5E	A0	

TOLERANCES ARE:
DECIMALES ANGLES
.X ± 0.2 ±
.XX ± 0.1

APPROVALS	DATE
APPROVED:	
CHECKED:	
CHECKED:	
DRAWN: S.peng	03/24/2014

TITLE: 固定式插座/Fixed socket

PART NO. M5E0304AFNBG1 REV. *

LINCONN Linconn Elc Tech Co.,LTD