ECN	REV	DESCRIPTION	DATE	APPROVED

1）0B系列推拉自锁连接器简介

0B series connectors provide the following main features:

- security of the Push-Pull self-latching system -multipole types 2 to 9 contacts
- solder, crimp or print contacts (straight or elbow) -high packing density for space savings
- multiple key options to avoid cross mating -keying system (<G>key standard) of similar connectors for connector alignment
- 360°screening for full EMC shielding.

2）技术特性/Technical Characteristics

使用环境/Environment：室内/Indoor
接口密封/Ingress protection：IP50
温度等级/Rated Temperature: -25°,+150°
寿命/Durability: >500 mate/unmate cycles
盐雾/Corrosion Resistance: Salt spray test>144h

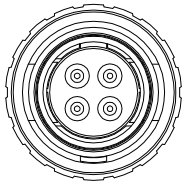

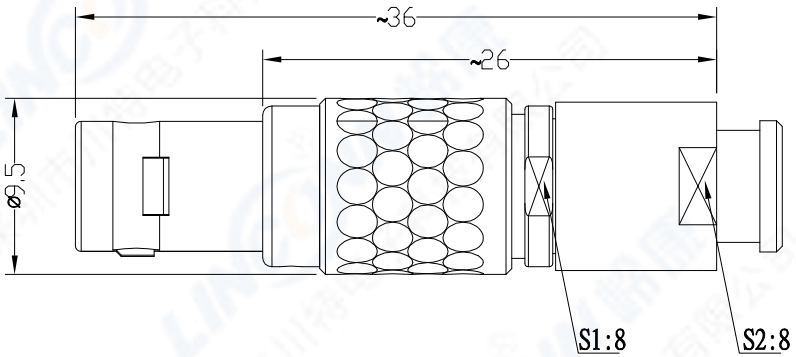

3）编码原则/Part Number

插头/Plug TLTGG 0B 304 C L A D42 Z

- 主型号/Key System(Ⅰ)
- 针数/Pin Number(Ⅱ)
- 外壳/Outer Shell
- 绝缘体/PPS Insulator
- 焊接式/Sold Tpye
- 线夹/Collect(Ⅲ)
- 护套/Bend relief

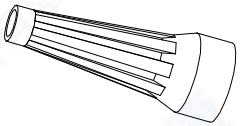

护套/Bend relief
SCALE 1:2

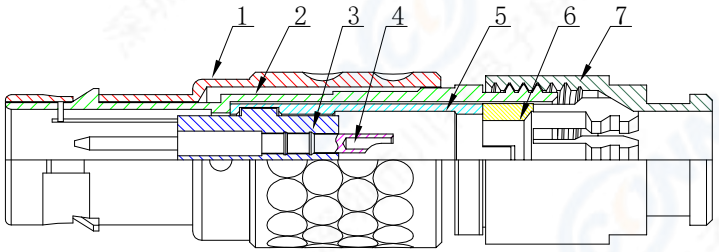

4)编码说明/Part number example

定位销/Key System(Ⅰ)

KEY LAYOUT	键位/Key Type	G	A	B	C	D	E	F	J	K	L
	键位/Key	1	2	2	2	2	2	2	2	2	2
	外壳型号/Type	TLTGG	TLTGA	TLTGB	TLTGC	TLTGD	TLTGE	TLTGF	TLTGJ	TLTGK	TLTGL
	角度/Angle	0°	30°	60°	90°	135°	145°	155°	45°	70°	80°
		/	α			ß			γ		

线夹/Collect(Ⅲ)

线夹代号/code	35	42	52
线径/Cable OD	2.5-3.4	3.5-4.0	4.1-5.0
线夹/Collect Size	3.5mm	4.2mm	5.2mm

针数/Pin Number(II)

系 列/Series	302	303	304	305	306	307	309
孔位排列/Pin Number							
接觸體直徑/Pin size	0.9mm	0.9mm	0.7mm	0.7mm	0.5mm	0.5mm	0.5mm
適配線纜/Conductor size	20AWG	20AWG	22AWG	22AWG	28AWG	28AWG	28AWG
額定电流/Rated current	10A	8A	7A	6.5A	2.5A	2.5A	2A

序号 ITEM	名称 & 规格/Name & DESCRIPTION
7	尾螺帽/Collect Nut: 黄铜镀铬/Brass,Chrome plated
6	线夹/Collect: 黄铜镀镍/Brass,Nickel plated
5	固定片/Insulator Carrier: 黄铜镀镍/Brass,Nickel plated
4	公针芯/Pin: 黄铜镀金/Brass,Gold plated
3	绝缘体/Insulator: PPS
2	锁定套筒/Latch Sleeve: 黄铜镀镍/Copper ,Nickel plated
1	外壳/Outer Shell: 黄铜镀铬/Brass,Chrome plated

SCALE F	TOLERANCES ARE: DECIMALES X± .X± ANGLES ±	TITLE: 插头/Plug	
SHEET 1 OF 1	DIMENSION MM	APPROVALS	DATE
		APPROVED:	
DWG NO. TLTGG0B	REV. A0	CHECKED:	
		CHECKED:	
		DRAWN: pengsen	26/02/2020
PART NO. TLTGG 0B 304 CLADZ		REV. *	

LINCONN Linconn Elc Tech Co.,LTD