ECN	REV	DESCRIPTION	DATE	APPROVED

1) 2K系列推拉自锁连接器简介

2K series connectors provide the following main features:

- security of the Push-Pull latching system -multipole types 2 to 32 contacts
- solder, crimp or print(straight or elbow)contacts -high packing density for space savings
- multiple key options to avoid cross mating -keying system (<G>key standard)for connector alignment
- 360° screening for full EMC shielding
- rugged housing for extreme working conditions -watertight connection(IP67/IP66)

2) 技术特性/Technical Characteristics

使用环境/Environment: 室外/outdoor
温度等级/Rated Temperature: -25°,+150°
寿命/Durability: >500 mate/unmate cycles
盐雾/Corrosion Resistance: Salt spray test>144h
防水等级/Protection index:IP67/IP66

3) 编码原则/Part Number

固定式插座/Fixed socket TLZEG 2K 310 C L N

- 主型號/Key System(Ⅰ)
- 針数/Pin Number(Ⅱ)
- 外壳/Outer Shell
- 绝缘体/PPS Insulator
- 印制板接/Print Tpye

4)编码说明/Part number example

定位销/Key System(Ⅰ)

KEY LAYOUT	键位/Key Type	G	A	B	C	D	E	F	L
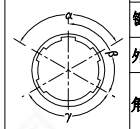	键位/Key	1	2	2	2	2	2	2	2
	外壳型号/Type	TLZEG	TLZEA	TLZEB	TLZEC	TLZED	TLZEE	TLZEF	TLZEL
	角度/Angle	0°	30°	45°	60°	95°	120°	145°	75°
		/	α			γ	β		γ

针数/Pin Number(II)

系 列/Series	302	303	304	305	306	307	308	310	312
孔位排列/Pin Number									
导体直径/Pin size	2.0mm	1.6mm	1.3mm	1.3mm	1.3mm	1.3mm	0.9mm	0.9mm	0.7mm
适配线缆/Conductor size	14AWG	16AWG	20AWG	20AWG	20AWG	20AWG	22AWG	22AWG	22AWG
额定电流/Rated current	25A	17.0A	15.0A	14.0A	12.0A	11.0A	10.0A	8.0A	7.0A

系 列/Series	314	316	318	319	326	332
孔位排列/Pin Number	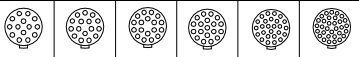					
导体直径/Pin size	0.7mm	0.7mm	0.7mm	0.7mm	0.5mm	0.5mm
适配线缆/Conductor size	22AWG	22AWG	22AWG	22AWG	28AWG	28AWG
额定电流/Rated current	6.5A	6.0A	5.5A	5.0A	2.0A	1.5A

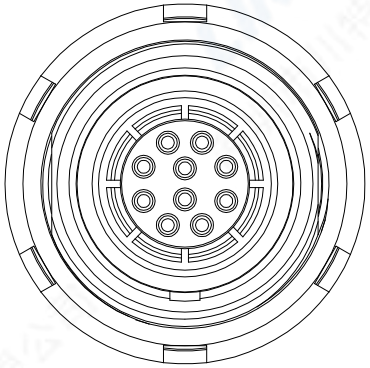

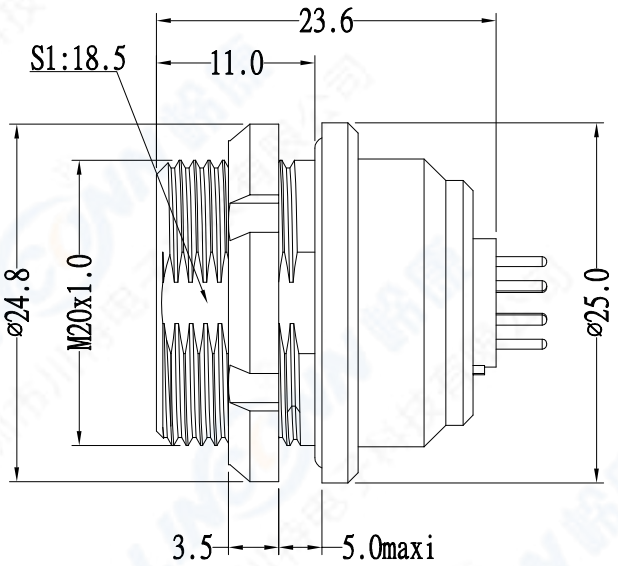

5)面板開孔尺寸/Hole Size

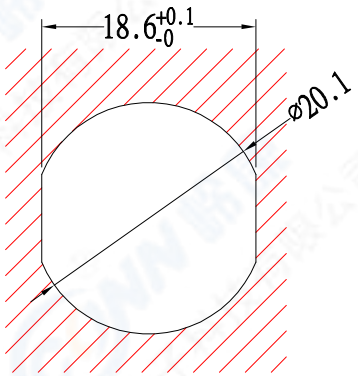

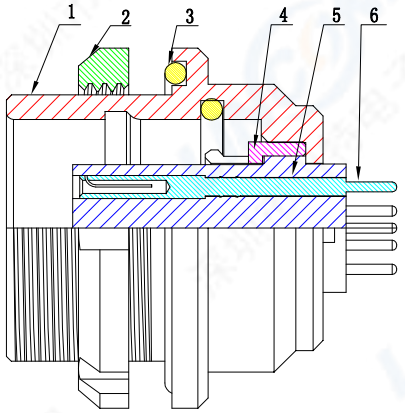

序号 ITEM	名称 & 规格/Name & DESCRIPTION
6	母针芯/Pin: 磷铜镀金/Phosphor copper,Gold plated
5	绝缘体/Insulator: PPS
4	接地环/Earthing crown: 黄铜镀镍/Brass,Nickel plated
3	密封圈/O-RING: 橡胶/Rubber
2	开槽螺母/Notched nut: 黄铜镀铬/Brass,Chrome plated
1	外壳/Outer Shell: 黄铜镀铬/Brass,Chrome plated

SCALE F	TOLERANCES ARE: DECIMALES X± .X± ANGLES ±	TITLE: 固定式插座/Fixed socket	
SHEET 1 OF 2	DIMENSION MM	APPROVALS	DATE
		APPROVED:	
		CHECKED:	
DWG NO. TLZEG2K	REV. A0	CHECKED:	
		DRAWN: pengsen	26/02/2020
		PART NO. TLZEG 2K 310 CLN	REV. *
		LINCONN Linconn Elc Tech Co.,LTD	