ECN	REV	DESCRIPTION	DATE	APPROVED

PART NUMBER

M12H 9 308 X F N S S

- SERIES NAME
- Panel Cut-Out: M12x1.0
- NO. OF CONTACTS:8Pin
- INSERT HOUSING CODING: X-coded
- INSERT HOUSING TYPE:Female
- SOLD TPYE:PCB L180°
- ACCESSORIES:S=Shell 0=NO
- SHIELDED:S=Shield 0=NO

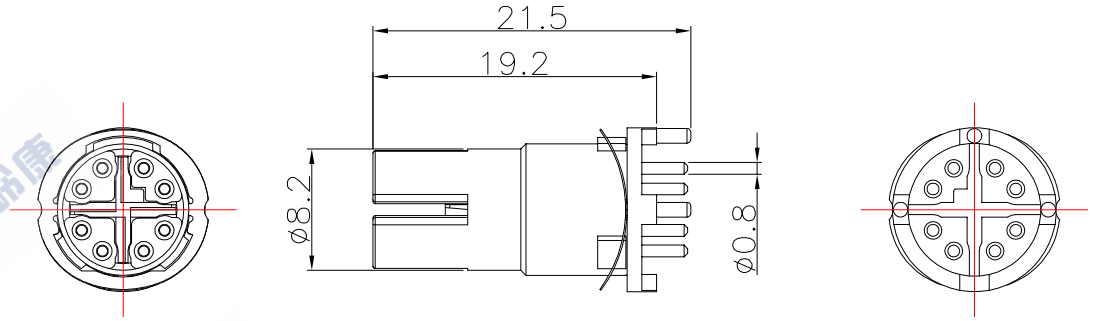

MATERIALS:

CONTACT: PHOSPHOR COPPER, GOLD PLATING
INSULATION: PA
OUT SHELL: BRASS NICKEL PLATED
O-RING: NBR
HEXAGONAL: BRASS NICKEL PLATED
CROSS SHIELDED: ZINC ALUMINUM ALLOY, NICKEL PLATED

TECHNICAL SPECIFICATION:

1. RATING VOLTAGE: 48V, RATING CURRENT: 0.5A
2. CONTACT RESISTANT: 10 mOhm MAX
3. INSULATION WITHSTAND: 100 MOHm MIN
4. PROTECTION: IP67
5. TEMPERATURE RANGE: -45° ~80°
6. TRANSMISSION CHARACTERISTICS: CAT6a
7. RECOMMENDED PCB THICKNESS: 2.0MM MAX

PCB LAYOUT & PANEL HOLE SIZE

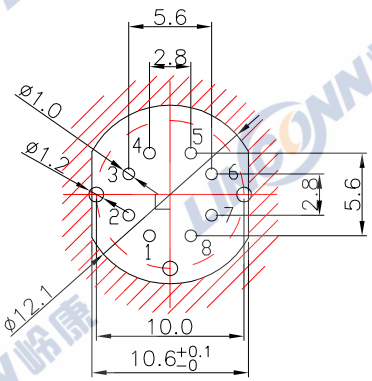

ACCESSORIES Panel mounting base(optional)

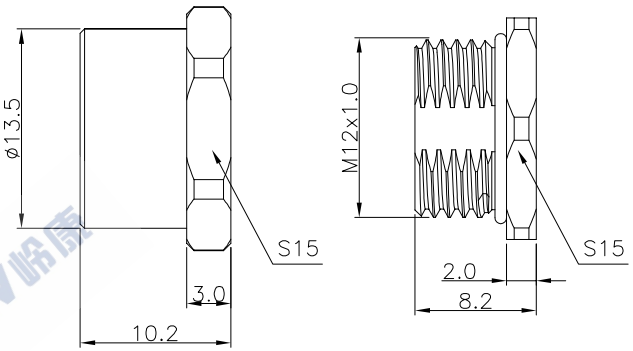

SCALE F	TOLERANCES ARE: DECIMALES .X ± 0.2 .XX ± 0.1 ANGLES ±	TITLE: M12 X-8pin female plug	
SHEET 1 OF 1	DIMENSION MM	APPROVALS	DATE
DWG NO.	REV. A0	APPROVED:	
		CHECKED:	
		CHECKED:	
		DRAWN: pengsen	09/04/2021
		PART NO. M12H9308XFNOS	REV. *
		LINCONN Linconn Elc Tech Co.,LTD	