| ECN | REV | DESCRIPTION | DATE | APPROVED |
|---|---|---|---|---|
| | | | | |

## 1）00B系列推拉自锁连接器简介

00B series connectors provide the following main features:

- security of the Push-Pull self-latching system -multipole types 2 to 4 contacts
- solder, crimp or print contacts (straight or elbow) -high packing density for space savings
- multiple key options to avoid cross mating -keying system (<G>key standard) of similar connectors for connector alignment
- 360° screening for full EMC shielding.

## 2）技术特性/Technical Characteristics

使用环境/Environment: 室内/Indoor
接口密封/Ingress protection: IP50
温度等级/Rated Temperature: -25°,+150°
寿命/Durability: >500 mate/unmate cycles
盐雾/Corrosion Resistance: Salt spray test>144h

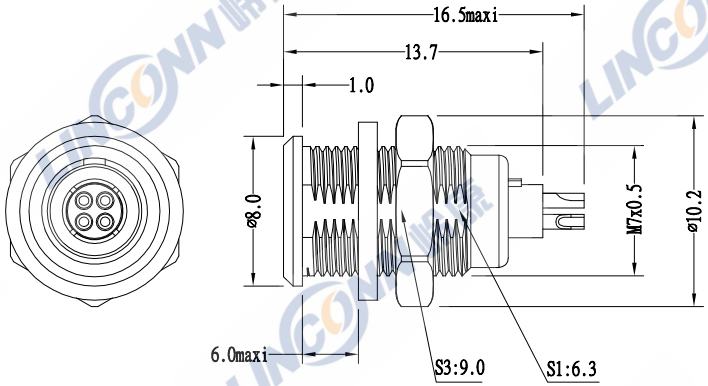


## 3）編碼原則/Part Number

固定式插座/Fixed socket TLEGG 00 304 C L L

- 主型號/Key System(I)
- 針數/Pin Number(II)
- 焊接式/Sold Tpye
- 绝缘体/PPS Insulator
- 外壳/Outer Shell

## 4)编码说明/Part number example

定位銷/Key System(I)

| KEY LAYOUT | 鍵位/Key Type | G | A | B | J |
|---|---|---|---|---|---|
| 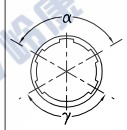 | 鍵位/Key | 1 | 2 | 2 | 2 |
| | 外壳型号/Type | EGG | EGA | EGB | EGJ |
| | 角度/Angle | 0° | 30° | 60° | 45° |
| | | / | α | | γ |

針数/Pin Number(II)

| 系 列/Series | 302 | 303 | 304 |
|---|---|---|---|
| 孔位排列/Pin Number | | | |
| 接觸體直徑/Pin size | 0.5mm | 0.5mm | 0.5mm |
| 適配線纜/Conductor size | 28AWG | 28AWG | 28AWG |
| 額定电流/Rated current | 5A | 3A | 2A |

## 5)面板開孔尺寸/Hole Size

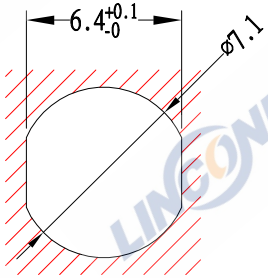


| 序号 ITEM | 名称 & 规格/Name & DESCRIPTION |
|---|---|
| 6 | 母针芯/Pin: 磷铜镀金/Phosphor copper,Gold plated |
| 5 | 绝缘体/Insulator: PPS |
| 4 | 接地环/Earthing crown: 黄铜镀镍/Brass,Nickel plated |
| 3 | 六角螺母/Hexagonal nut: 黄铜镀镍/Brass,Nickel plated |
| 2 | 垫圈/Locking washer: SUS 301 |
| 1 | 外壳/Outer Shell: 黄铜镀铬/Brass,Chrome plated |

| | | | |
|---|---|---|---|
| SCALE F | TOLERANCES ARE: DECIMALES x± .x± ANGLES ± | TITLE: 固定式插座/Fixed socket | |
| SHEET 1 OF 1 | DIMENSION MM | APPROVALS | DATE |
| | | APPROVED: | |
| DWG NO. TLEGG00 | REV. A0 | CHECKED: | |
| | | CHECKED: | |
| | | DRAWN: pengsen | 26/02/2020 |
| PART NO. TLEGG 00 304 CLL | | REV. * | |

LINCONN Linconn Elc Tech Co.,LTD